Building a spinning wheel

Before I start, I'll give a little background. I am a male so that is the first difficulty in learning to spin fibers into something useful. Most people who spin yarn, crochet, or knit are female. The first introduction into any of these crafts I can remember was my Grandma teaching me to make rugs using old bread bags. This was way before there were plastic shopping bags. She lived and raised a family during the great depression and recycled as much as possible. She had someone build me a sort of crochet hook out of a popsicle stick. I can't remember exactly if I made a round rug, an oval rug, or both.

I am, and always have been, interested in making or fixing things for myself when possible. Spinning yarn is just another of the many skills I was interested in learning even if I never “need” to use that skill. I also learned how to make fire with a flint and steel, a fire piston, and even a bow drill but still use matches or a lighter most of the time I need to light a fire. Primitive or old fashioned ways have always fascinated me and it is nice to know that I could possibly survive if stranded away from modern technology for whatever reason.

Fast forward a few decades and my Grandfather, on the other side of the family, built a few decorative spinning wheels. I think he did build one that might have actually worked but he never got to see it work. As far as I know, it was never even tried. Now, another decade or so later, I have my own sawmill and an assortment of woodworking and metalworking tools and became interested in building a spinning wheel. Not really knowing exactly how they even work, I started looking for information on spinning and found out about drop spindles. They looked easy enough to build so I made a few different types of them and then came the next problem. What could I spin? I didn't have any wool and didn't have any special tools to prepare anything I could find into a form that was even possible to spin. YouTube and the internet was a little help finding out what I needed. Unfortunately, the special cards and other tools were way more expensive than I could afford so, like I always do, I started figuring out how I could build my own tools or improvise something I could find to do the job. A wool or cotton card wasn't something that looked like I could easily build myself and so I discovered that there was a tool called a comb or combs since you need two of them. That looked more possible so I found a box of finishing nails and a little piece of wood. I only made one at first and took a little store bought yarn and cut it into pieces and tried to pull the pieces through those nails to fluff them up. With a lot of work, I did get the pieces of yarn into smaller strands which I could get to twist back together again into a lumpy, thick and thin mess. Later on, having some dog brushes to use as cards, I found that short pieces of old yarn or even some types of rope could be turned back into usable fiber. Even cotton balls could be used to make yarn although that is more difficult to spin than longer fibers like wool.

Back to the internet, I discovered the Dodec spinning wheel which looked very easy to build.

The original designer of the Dodec spinning wheel has his free plans available at http://www.ravelry.com/groups/the-dodec and http://www.spinningdaily.com/media/p/9016.aspx but both of these require you to join which is also free. He also sells a 16 page e-book about building an even simpler spinning wheel which he sells for only $15. I don't have that book so I can't say much about it or how good it might be. It appears that he simplified the wheel design even more than the dodec design which would probably be good for anyone who wants to build a spinning wheel but doesn't have a lot of woodworking tools or experience.

Soon I had one put together and showed it to a friend who is also a Jack of all trades sort of guy. It

turned out not only had he heard of this spinning wheel, he was at one time involved in spinning and weaving. A week or so later, he showed up with a bag that contained about an ounce of wool. Now I had a spinning wheel of sorts and something to spin. I made myself a better set of combs using some sharpened, longer nails and a couple pieces of wood. This gave me a way to fluff up and align the locks of wool into something a little better for spinning. Still not quite good enough and quickly running out of wool, I ordered some raw wool from Ebay along with some real cheap dog slicking brushes to use as small cards. Soon I had my bag of wool but the cards were from outside the country so they took a while longer to get but were very inexpensive. I used my homemade combs and first tried the drop spindle and the Dodec spinning wheel (which is basically a foot powered spindle) with some raw wool. I made some rather crude, dirty yarn which varied from thread to rope size but at least I made it myself.

Next, I found a website which offered a free ebook on using a drop spindle so I gave them my email address, picked a user name and password and soon had that "free" book. Along with the free download, I got a daily newsletter that turned out to be mostly an ad for the magazine and access to a forum. That forum was not very active and the only response to my post showing a crude flyer assembly and asking about how they work was one member who did help me figure out how the all important flyer worked by directing me to videos and showing me pictures of her wheel. Unfortunately, although I was getting better at spinning on the Dodec wheel, it wasn't very good yarn unless you called it art yarn which was not what I wanted. I got discouraged by not being able to make perfect yarn as well as the limited activity and involvement on that forum and lost interest in spinning wool. Although I was able to spin usable yarn, it wasn't easy to get the fibers to draft out smoothly and just wasn't as much fun as I hoped. Most of the videos showing spinning yarn either made it look real easy or made yarn that looked like what I was getting except they called it art yarn. I did still want to build my own spinning wheel that looked like what I imagined a real spinning wheel should. It took me a while and a lot of researching (mostly watching YouTube videos) to find out the technical names of the various parts and the type of spinning wheel that most closely matched my my vision of a "real" spinning wheel.

In this document, I will try to record some of the information I find as well as describe the progress I make while trying to make my own spinning wheel and learning to spin yarn. It is my goal to make this into a sort of beginner's guide to learning to build a spinning wheel and other tools as well as learning to use those tools to turn fibers into yarn.

One thing to keep in mind is that a better, more expensive, commercial spinning wheel will not magically make your fibers into "perfect" yarn. You have to be able to pull out or draft those fibers out and then let them twist into a nice yarn or thread. Preparing the fibers right will make a difficult or impossible task of drafting out consistent amounts of fiber a lot easier. This is something that would have helped me a lot when first trying to spin yarn. Possibly if I had bought prepared fiber instead of raw wool I would have caught on quicker and not gotten so discouraged. I wanted to start with raw fibers and not just something premade to spin mainly because I was (and still am) more interested in the HOW than the end product.

When I was searching for spinning wheel plans online, I found a couple that were close to what I wanted to build but they were not exactly what I was looking for.
Popular Mechanics Feb. 1928 - YOU CAN MAKE THIS COLONIAL SPINNING WHEEL
Popular Mechanics Jan. 1934 - Colonial SPINNING WHEEL You Can Build
Although they were probably based on historical spinning wheels or maybe even copies of actual models, my idea of what a spinning wheel should look like was the one my Grandfather built many

years ago. He most likely designed that wheel himself and probably based his design on what he could build and what materials he could get. This was just a display and not a working spinning wheel but it did have most of the parts that it would need to actually work. It had three legs which were all the same length and the table or base was level with the floor. This was one difference between his design and the plans I was able to find. It had a main drive wheel which was held in place above the base with two vertical turned spindles. This was another difference. The plans I found were held by angled spindles and the wheel was partially below the base. His design had a drive rope that connected to a pulley hooked to a flyer. It also had a bobbin but that part did not spin and had no brake or even a pulley on it. The flyer didn't have any pins or hooks on it and there was no orifice for the yarn to go through either. The basic design was there and it shouldn't be too hard to add in the missing parts needed to make his design into a working model.

One problem with the wheel he made for my Mom was the drive wheel warped. It was also the part I was not looking forward to building. It had many identical turned spokes which he made on a homemade lathe that had a pattern tracing cutter. My own lathe was just a small basic wood lathe and most of my lathe tools were homemade. The Dodec spinning wheel used a very simple method to making the drive wheel which did not, in my opinion, look bad. Using that design eliminated one of the most difficult tasks of building a spinning wheel. Other homebuilders have used old bicycle wheels or circles of plywood for this part. I did not want to do that. Since I was going to make changes to my Grandfather's design, the bearings for the flyer was the next thing I wanted to change. He just used a bolt which was not hollow in a hole drilled in one of the maidens. In my own research, I was intrigued by braided corn husk bearings that were used on some old spinning wheels. The simplicity and the easy replacement of this important part was something I wanted to include in my own design. Even if I couldn't find any corn husks, I think there are many other things that would work the same way. Leather is another option for the bearings which was used in some designs.

Moving on, the next part to consider was the flyer itself. This part can be made in many shapes. It basically just has two arms which spin around the bobbin and wind the yarn on. This was one thing that I didn't understand how it worked. How could it both allow the needed twist to enter the fibers and also pull the finished yarn through the orifice and onto the bobbin? YouTube provided the answer to this but it took some searching. Here is one video that describes the various methods of doing this.

Ask the Woolery Series: Scotch Tension, Irish Tension and Double Drive Differences
http://www.youtube.com/watch?v=tDecQOjCqR8

This next video was the one that showed me how to make cotton punis which also worked for the wool I had and finally allowed me to draft out the fibers without getting lumps. It might seem like a simple thing but it made a world of difference. I knew that fiber preparation was likely the key to easy drafting but until I found this video, I wasn't getting good results.

Step #1 Cotton carding and making punis for spinning cotton yarn.
http://www.youtube.com/watch?v=bIRs5q4apHQ

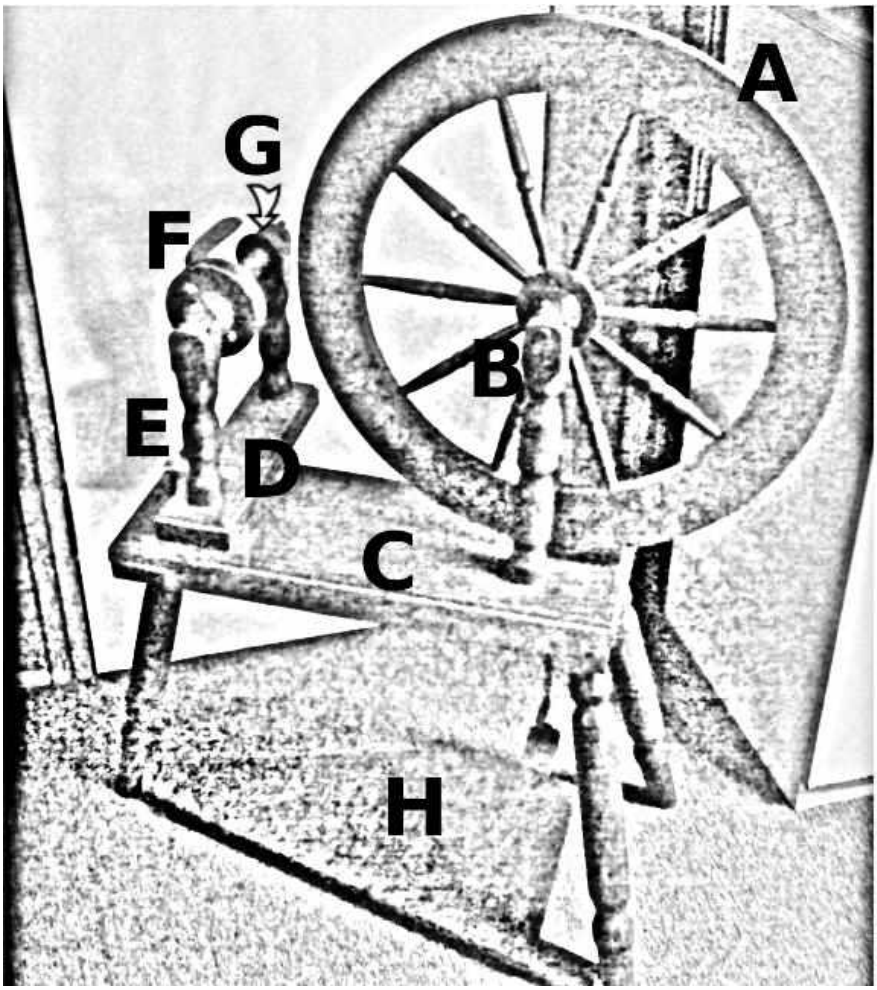

Main Parts of Spinning Wheel

A-Drive Wheel

B- Drive Wheel Support

C- Base (or Table)

D- Mother-of-All

E- Maiden

F- Flyer

G- Bobbin

H- Treadle

The picture above is the spinning wheel my Grandfather made. Although it doesn't actually work to spin yarn, most of the parts are there and I plan to base my own design on this wheel.

The drive wheel, which I will probably change to the easier to build Dodec wheel type, is around 20 inches in diameter and the rim of that wheel is 2-3/8 inches and just under 3/4 inch thick. The drive wheel hub is 3 inch diameter and 1 inch wide plus a 1-1/2 inch diameter x 1/2 inch long hub on both ends.

The drive wheel supports are turned to about 1-1/2 inch diameter and 11 inches long. The two maidens, which support the flyer and the bobbin are 1-1/2 inch diameter and 7-1/2 inches long. This wheel is different than any I have seen since the flyer and bobbin are on separate shafts but I think it could still be made to work that way. I plan to use Scotch tension on my design so the brake would be on the bobbin and the flyer will be driven by the main drive wheel. I see no reason it shouldn't work but, as I write this, I haven't tried it yet.

The Mother-of-All, which has the maidens attached, is 3 inches wide x 12 inches long and 1-1/4 inch thick. It is hinged on the side closest to the drive wheel to allow the tension to be adjusted. That seems like an easy solution to that task which is often done with a threaded wooden piece. I haven't ruled out the threaded wood completely because that might be an interesting part to build especially without special (expensive) threading tools.

The base is 8 inches x 20 inches and 2-1/4 inches thick. The legs were attached to this piece using separate parts which were recessed into the bottom of the base. I expect this was done to make drilling the holes and attaching the legs easier or maybe he didn't want to risk the large thick part in case the holes were not drilled right. He is no longer around to ask.

The three legs are all the same size, shape, and length unlike the other plans I have seen with one leg longer and the base at an angle. Since the wheel I am copying has a level base, that is what I picture a spinning wheel to look like and it is how I intend to build mine. The legs are 1-1/2 inch diameter and 16 inches long not counting the inch or so that attaches them to the base.

The flyer pulley is 3-3/4 inch diameter x 1 inch wide with a 1-3/4 inch diameter x 3/4 inch long hub. This part may need some changes made to it in order to make it actually work. The flyer arms were made from two pieces and screwed to the flyer pulley. They were curved about 4-3/4 inches long x 5/8 inch thick and 3/4 inch wide.

The bobbin is 2 inch diameter and 4 inches long but again, this will need changed to include the brake pulley.

I haven't measured the treadle since I will probably make mine a little different depending on what I have to use. He used a bit of thin plywood and a couple boards. I'd rather avoid any plywood if possible.

This was my second attempt at building a flyer to find out how they work. This was taped to the spindle of the Dodec spinning wheel. There is a pair of scissors used as a weight (brake) on the bobbin. The string belt of the Dodec spinning wheel was not really tight enough and the flyer needed supported better but it did prove to me that the basic idea works.
This was just a test and I have no intention of building my own spinning wheel with this flyer. It was just some PVC pipe I had laying around that was the right size for one piece to fit over the other. Unless I want to spin rope, I don't think the orifice needs to be 1/2 inch diameter although some wheelsmade for art yarn might be that size.

The picture above is my first homemade Dodec spinning wheel. It was made using threaded rod

instead of the regular bolts called for in the plans. For the drive wheel axle bolt, I soldered a nut on the end using a propane torch and some plumbing type, lead-free solder and flux. Instead of using nylon locknuts, I used double nuts on the back of the drive wheel. If you do this, you might need longer bolts or threaded rod. Also, depending on how straight you drilled the hole or how tight or loose the wheel turns, you might need to space it a little further from the stem to keep it from hitting. This will need a longer bolt and then the top two bolts will also need to be longer to make sure the spindle pulley lines up with the drive wheel.

This is a pretty forgiving design and, as the plans state, poor craftsmanship won't keep the wheel from working. Searching online, you can see that many people have built this design using whatever materials and tools they had and their wheels still work.

I made some changes to the design to make it easier for me to build. The main change was to the base. I redrew the plans to use 45 degree angles so the pieces could be cut using a miter saw.

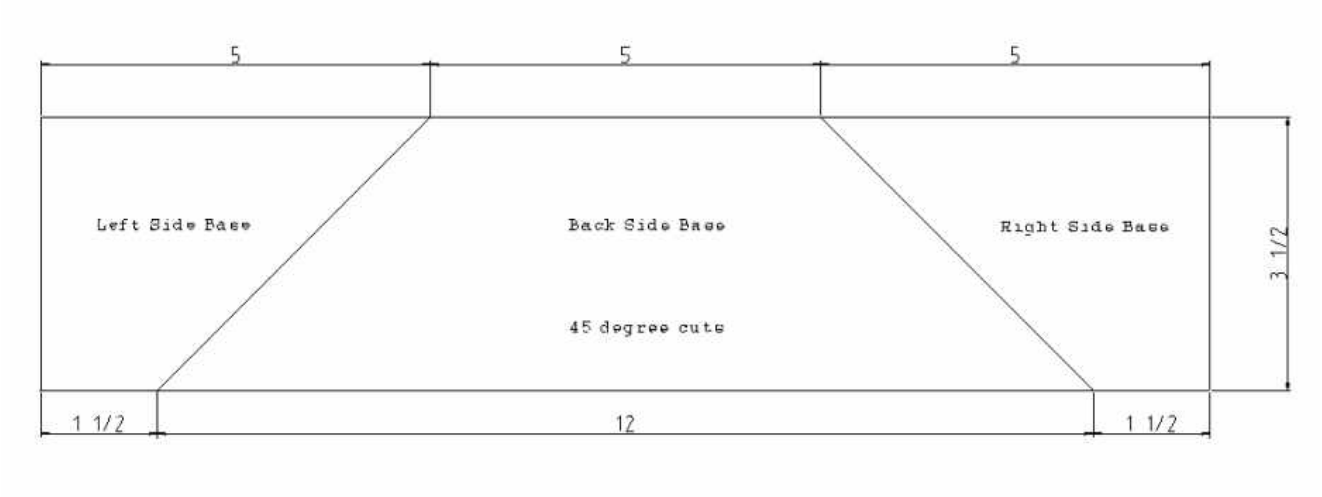

The bottom base and front base parts remained the same as the original plans. Like the original, you should use the stem piece or a scrap of 1x4 to make sure it will fit when you assemble the parts together. I used a little glue and an air powered brad nailer but regular nails or screws would also work although you might want to predrill the holes so it doesn't split the wood. My first Dodec spinning wheel fit a little loose and the second one I made fit too tight. I ended up scraping a little bit off the sides of the step on that second one to get a tight fit. I left the first one loose and it still works fine. I could have put a shim of some kind (like folded up paper) in the gap to tighten it up but it wasn't really needed.

I notice I left the width dimension off of the drawing below. It was just 3-1/2 inches which is the actual size of a standard 1x4 board. I used rough cut lumber on my spinning wheels so I ended up cutting and planing it to size.

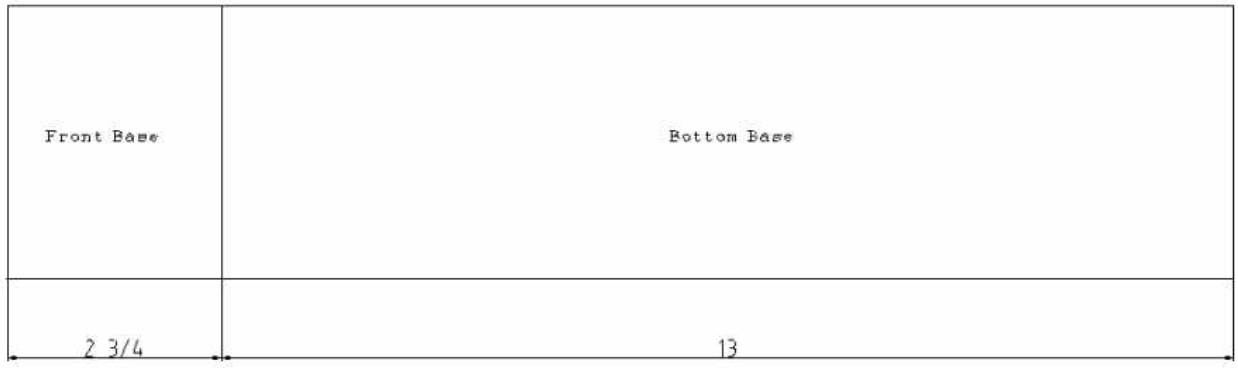

The next part is the stem. This part is just a straight piece of the 1x4 board about 28 inches long. The hole for the drive wheel axle was supposed to be 17/64" diameter which is about 1/16" over 1/4". On the first one I made, I just wobbled a smaller drill bit to open the hole up a little. That worked but it was a loose fit. The next one, I used a larger bit and it was also a little bit too loose but still works. The bolt or threaded rod is tight on this part so the fit wasn't real critical. I did end up using three nuts on the second one which spaced the wheel even further away from the stem and caused me to need a little longer pieces of threaded rod and more spacers (I used washers) on the spindle pulley to match the pulleys up so the drive string worked. Like I said, this design is very forgiving of less than perfect craftsmanship.
The holes at the top are the same as the Upper Receiver and you probably should use one or the other to mark out and drill the matching piece to make sure the holes line up.

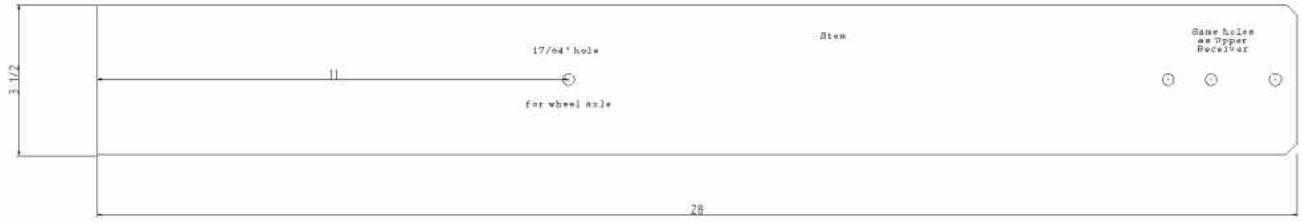

The Upper Receiver was made to the plans for my first one and the second one I used a 1-3/4" x 3-1/2" piece because that is what I had. I also cut some angles on the top edge of the second one to improve the looks a little. Both worked fine although I spaced the spindle and pulley a little different on each one to match them to the drive wheels. One used just a bunch of washers and the other one used washers and an oversize nut and washers as the spacers. Whatever it takes to get the spacing right.

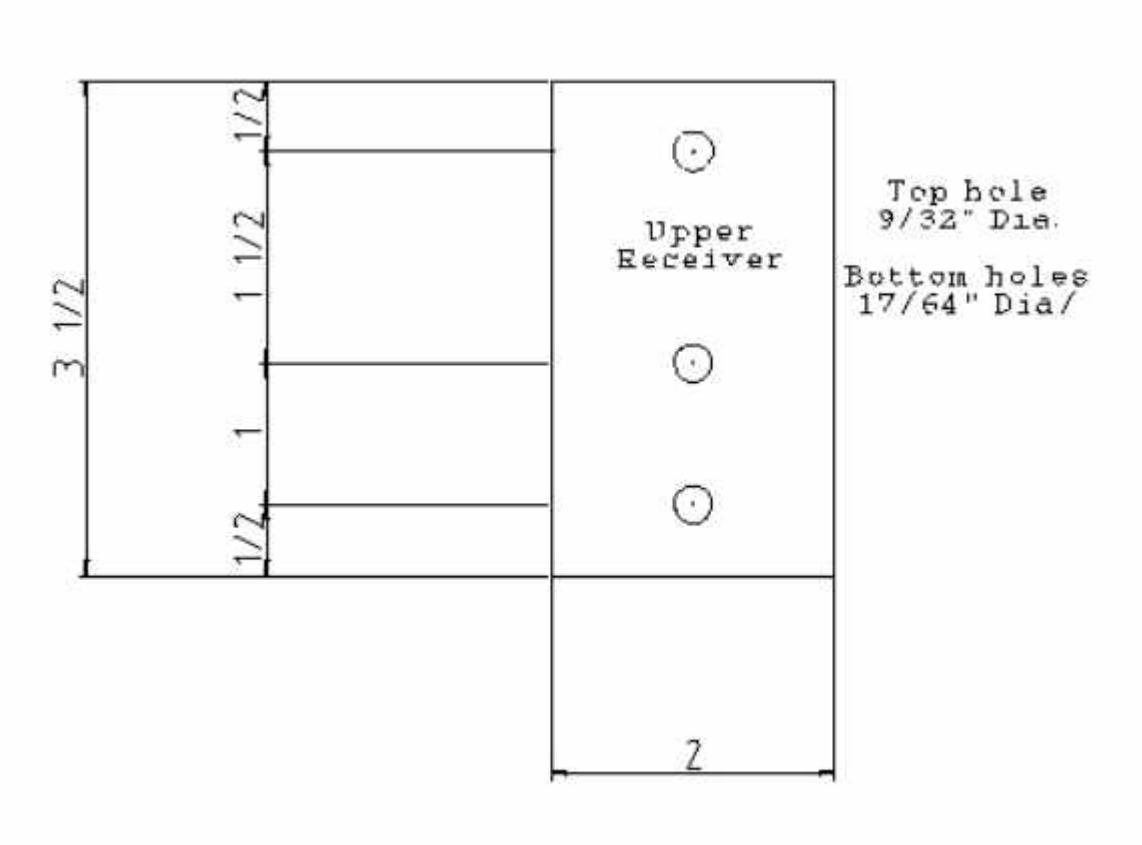

For the treadle, I modified the first one to use a 3-1/4" width to fit the space in the base a little tighter and used the 3" wide one that I originally made on the second one. Like the rest of the parts, either way worked. I liked the looks of the wider one better but the narrower one is more forgiving if you don't get the hinge lined up exactly right.

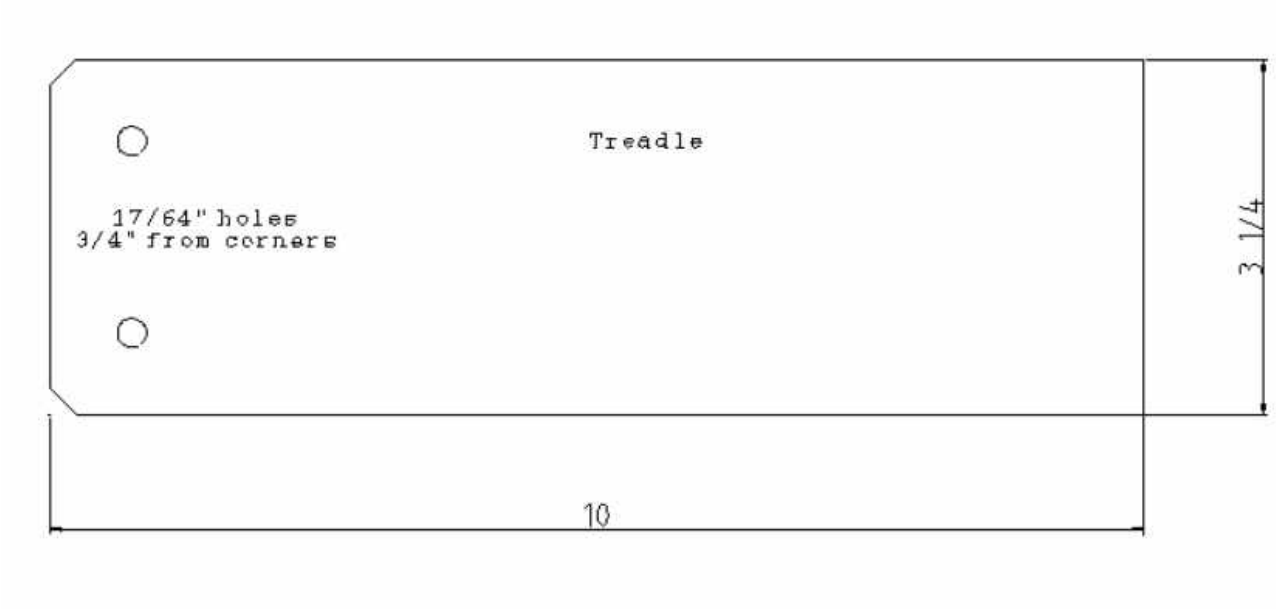

Moving on to the main drive wheel, you need to get about a 20 degree angle along one edge of your pieces. You should do this before cutting them to length. The original plans split the 1x4 in half while

cutting the angle to get the most from your wood. I had lots of wood so I cut the strips about 2 inches wide and then run them back through the table saw to cut the angle and to bring them to about 1-7/8" wide at the longest edge. It seemed easier than trying to line up that angled cut exactly on center. After the angles were cut, I chopped them up into 4 inch long pieces. This length is not critical and if you make them shorter or longer, it will change the finished diameter of the wheel but will probably still work. You should try to get them all the same length. I used a stop in the miter saw to do that. Next, I sanded the twelve pieces to clean up any rough parts from the cuts and round them very slightly so they were not sharp. If you search for pictures of Dodec spinning wheel online, you will see that many people have made their versions with whatever they had or could get and they all work. Assembling the dozen pieces requires a jig. This can be make from cardboard. It should be 1/8" shorter than whatever length your pieces ended up. The height should match the size of the shorter part of the angled pieces. Then you need to cut 30 degree angles on each side.

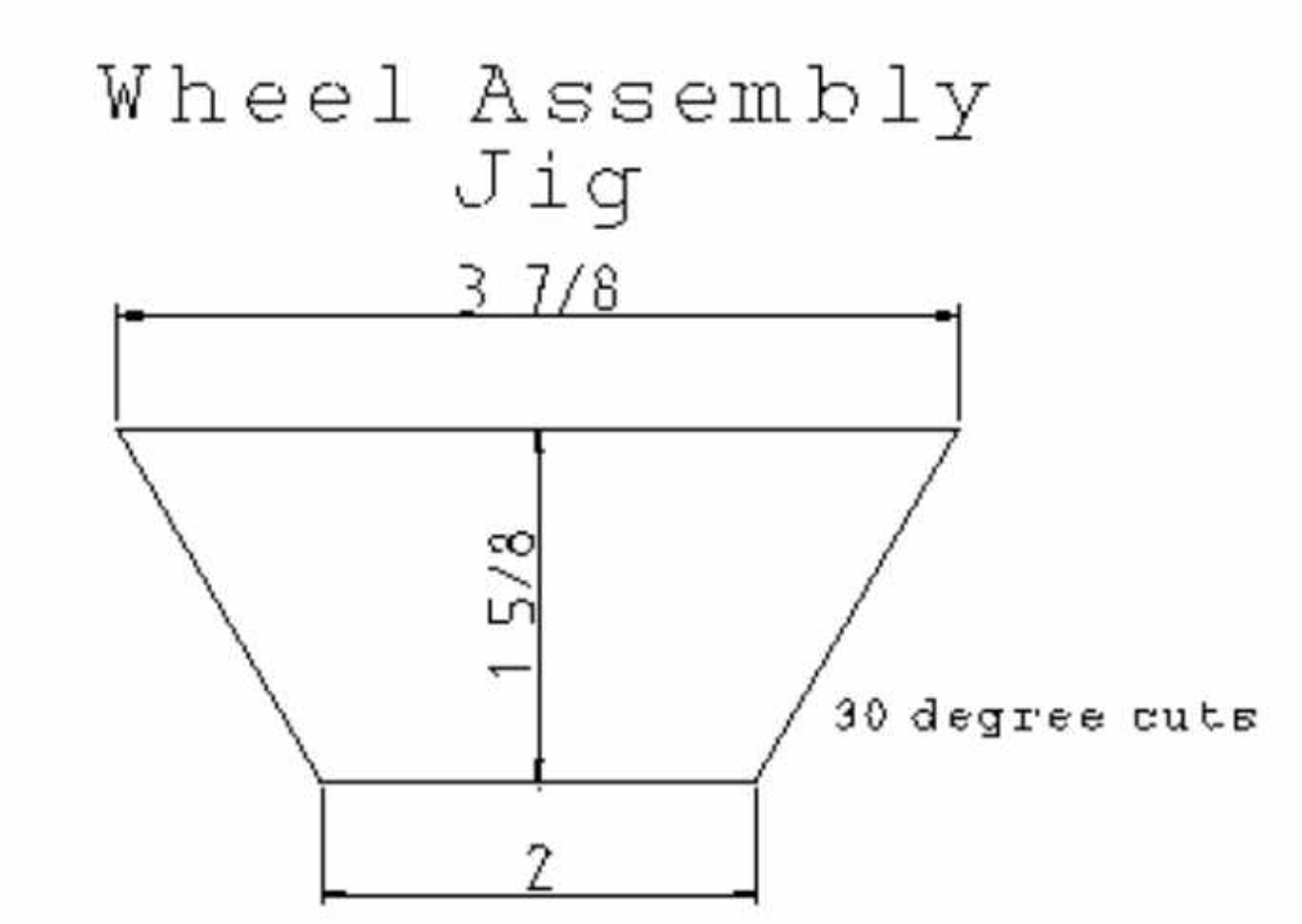

Assembling the wheel, although still pretty easy, is probably the most difficult part of building this design. Fortunately, the designer (I think he is the designer) has posted a video on doing this. Actually, you should watch all of his videos if you want to build the Dodec spinning wheel.

Wheel Jig
http://www.youtube.com/watch?v=S-13DrQ2YB4

For the two spokes on the Dodec wheel, it is just a simple 1-3/4" wide (half of a 1x4 ~ a little narrower won't hurt anything). The plans call for it to be about 13 inches long but that depends on the finished size of your own wheel. It only needs to have a 1/4" or 1/2" overlap on each side. Check your own wheel and make the spokes to fit them. I made mine 13 inches long and centered them as best I could to form an "X" in the center of the wheel. Then I marked the center of the actual wheel on the spokes (again, as best I could) and drilled the hole for the axle. This is where using a drill press would be nice. Otherwise, try to get the hole as straight as you can or it will wobble. It will likely still work but you might need to space it a little further from the stem to keep it from hitting as it wobbles around.

I used a wood screw in place of the shaker peg to drive the wheel. I cut a short piece of plastic aquarium tubing and put a small washer on the screw to keep from cutting the string that hooks between the treadle and the wheel.

The spindle pulley is just two pieces of 1-3/4 x 1-3/4 squares from the 1x4. The first one I sanded the corners off like the plans state. The second one was made from harder wood so I used a bench grinder to grind off the corners. That burnt the wood but was a lot quicker. A belt or disc sander would probably work good for doing this if you had one. You could probably use any small pulley you had but might need to adapt the hole to fit the 1/4" dowel used for the spindle.
Yet again, this is a very forgiving design.

The spindle itself is just a simple 1/4" diameter wooden dowel rod cut to 12 inches long. One end is sharpened with a rounded point and the back end is just rounded enough to deburr the end and allow it to fit in the top hole in the stem. It gets glued into the spindle pulley with about an inch sticking out the back side.

Finishing the assembly is just a matter of bolting the spindle Upper Receiver to the stem at a distance that positions the spindle pulley in line with the drive wheel and putting a string (or doubled string) around the spindle pulley and drive wheel then hooking the treadle to the pin on the wheel.
There is a video on YouTube showing the "Dodec" Brake Down.

The "DODEC" Brake Down
http://www.youtube.com/watch?v=IXXXJavpaO8

Next up in my process of designing my own spinning wheel will be redesigning the Dodec drive wheel to get the diameter closer to the 20 inch diameter of the wheel my Grandfather built.
I did find another video where someone put a homemade flyer assembly on a Dodec spinning wheel which might be an option if you want that feature on the simple spinning wheel. This isn't exactly what I want but it did prove to me that it is possible.

Homemade bobbin and flyer assembly
http://www.youtube.com/watch?v=vNIPj6TVc4k

I drew up a larger wheel using the same basic idea as the Dodec wheel using a CAD program. The length of pieces was rounded to the nearest 1/32" to make measuring the parts easier so it will not be exactly 20 inch diameter but should be close enough. I also drew it with 2" wide sections but this could

be changed to the 2-3/8" that my Grandfather's wheel had or even cut back to 1-3/4" or less without changing the outside diameter. The actual size of the wheel doesn't matter that much anyway. So long as it fits the space available and has enough weight and momentum to stay spinning with the treadle as it drives the flyer assembly, it should be good enough.

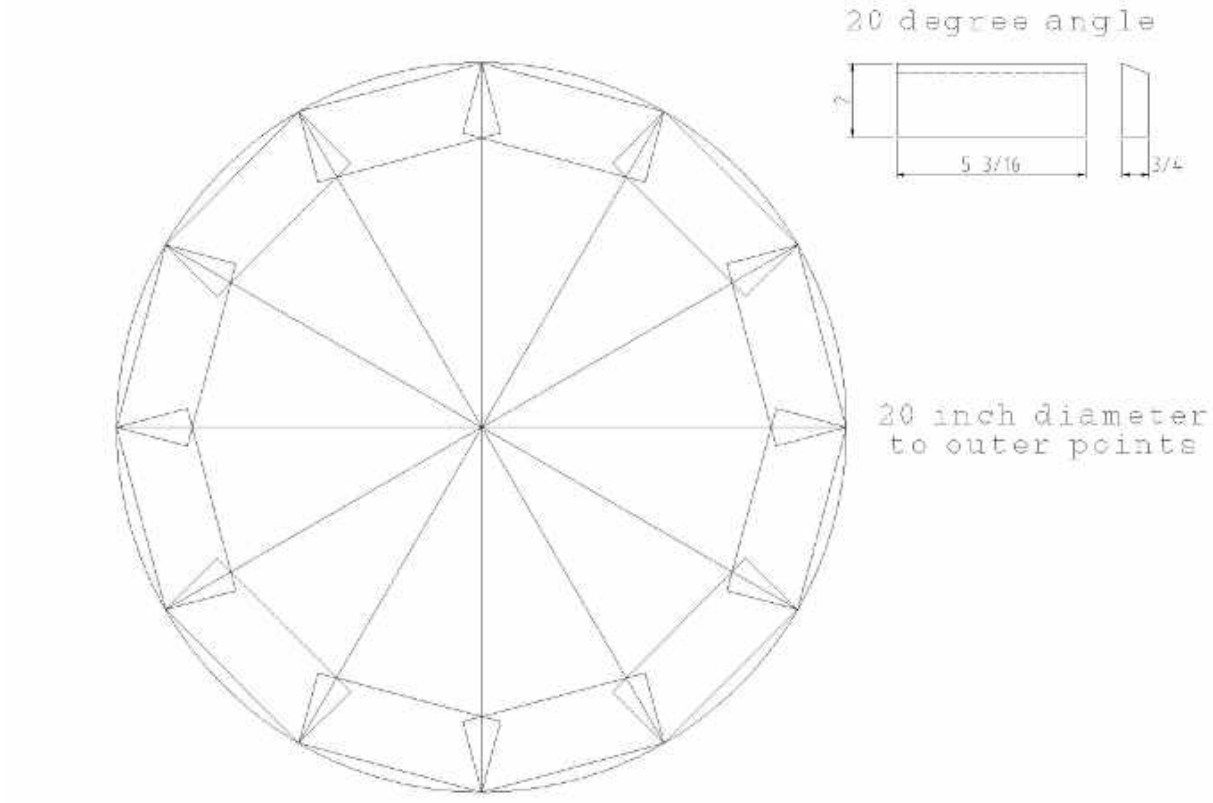

I'm considering throwing together a crude spinning wheel just to get a better idea of what I am trying to make. I already have two Dodec spinning wheels made and have another drive wheel built. It shouldn't take a lot to throw together a few pieces of rough-cut lumber to hold and drive the wheel in a horizontal position instead of vertical.

I started on my test build of my homemade spinning wheel design just to see what it might look like and how hard (or easy) it will be to build. I started out looking for an 8 inch wide board. Fortunately, the firewood pile was close by.

In that pile of wood, I was able to dig out a wide enough board to get an 8" x 20" piece and some parts to use for legs. With a little work on the table saw and some sanding, I came up with the three legged base. The parts were all pine but didn't look too bad for something that was destined to be burnt.

I already had the start of another Dodec type wheel made so I cut a couple pieces of ash for the wheel supports and set them up on the base to see how they would fit.

I have a little wood lathe and some homemade tools so I thought I'd just slap those 11 inch long, rectangles of ash on the lathe and turn a couple nicer looking spindles. Anyone who has worked with ash might be laughing now. If you don't know, ash is a hard wood. A really hard wood especially with homemade, not real sharp tools. It took me longer than I hoped and they didn't turn out real good but since this was just a test build to try to figure out a design and prove that the sizes and positions are right, they will probably do. I might even have to rebuild them again so there was no need to get worried about perfection.

I've got some more figuring to do now to determine how and where to mount the wheel to the spindles and the base. Now I see why the one I am using as a pattern was built with small blocks on the top of the spindles. Not only does it make removing the wheel possible (but not easy), it also has a tiny hole in the top of each one to oil the shaft. I might still use the spindles I turned on this one and redesign it for any future ones I might make. The only idea I have at the moment is to drill holes for the shaft and screw the wheel and spindles as one unit to the base. I could still drill a couple angled holes to oil the shaft and hope for the best. This IS just a test build anyway so if it doesn't work or wears out quick, at least I will know how NOT to build the next one.

Designing anything often involves more than one prototype before the finished design is worked out. Drawing out plans and calculating the sizes and locations for all of the parts needed is hard to do if you don't eventually try it for real. At least I have a start of prototype number one. I still hope this one will work but I know it isn't the final build or design.

Looking at the pictures, I see I have it facing backwards. The operator will be on the other side and the drive wheel will be on their right. At least that is how most of the pictures I have seen are made and it is how my Grandfather built his. I also can't think of anything else that needs glued to the base on this one so I'm going to put some stain on it now and see what that looks like.

Staining the legs and base made it look a little more finished. It isn't as nice as if it had been made out of cherry instead of pine but it will have to do.

The maidens were just a couple very quickly turned pine dowels. The real ones will have to be bigger diameter but there wasn't any pine 2x2 boards in the firewood pile and I didn't want to spend the time cutting some just to see what it looked like.

After setting the Mother-of-All and maidens in place (without screws) and then looking at how it might work, I haven't figured out a good way to make it work yet. On the one I am copying (which doesn't spin yarn), the flyer has a pulley that the belt from the drive wheel runs on to spin it. It is held in place with something hollow. I'll have to take it apart to see exactly what it is. It doesn't turn and the flyer pulley has an oil hole which makes it look like it was never intended to spin but the wooden pulley turns on it. One of the flyer arms is broken off of it so repairing that should be as good of an excuse as any to tear it apart.

I did take the flyer off of the old spinning wheel but couldn't get it as far apart as I planned to. I did get to see how it was put together. I should have taken that apart a long time ago.

Unfortunately, the broken arm was screwed AND glued in place and I didn't want to cut or chisel it off so I took the opportunity to oil it up and get it turning freely again.
The hollow tube looks like it could be from a vehicle fuel line or brake line. Maybe just some other metal tube my Grandfather had laying around. It looks like he epoxied a washer on the end to keep the flyer in place and probably glued the other end in the little block of wood that screws onto the top of the maidens.

In the picture above, you can see the epoxy on the inside part of the orifice. I also threaded some yarn through that hole and hooked it to the arm with another short piece of yarn. Then I twisted the flyer around and it turns out that maybe this old spinning wheel was very close to actually working the way he had built it. Before I put it back together, I traced out the one remaining arm to use as a pattern.

I'd like to make the tube on my own a little bigger inside diameter and the flyer would need hooks on it but I really think his design could be made to work.

Today I installed the drive wheel on the base. For the axle and the crank, I used 1/4" threaded rod. The end of the rod was bent to form the crank using a propane torch and a pair of pliers. I soldered a nut and washer on the end to keep the footman (which will probably be either string, rope, or leather) from slipping off.

In the picture above, you can see the numerous nuts and washers used to keep the wheel tight to the shaft and in the right locations. That threaded rod on the crank will be a problem. Depending on the direction the wheel is spinning, the footman will want to follow the threads and a quick test with some twine sometimes grabbed and twisted around the shaft. It would also likely wear out whatever is used pretty quick. I have put wood glue on the threaded section to try to fill in the threads. I'll give it another coat once this one dries. I might try wrapping tape or thread over it. If all else fails, I could file the threads smooth.
Another thing that I would change on the next build (if this one works at all) would be to raise the wheel another 1/2" or so. This one hit in one spot but I fixed that by carving a tiny bit off the corner of the onewheel section that hit.

Next up will probably be the treadle so I can make the wheel spin under foot power.

Building the treadle frame went pretty fast. I haven't put any plywood or other larger surface on the treadle yet. All I did was cut a couple somewhat square pieces that were in the firewood pile and screwed them together into a sort of "T" shape. I attached them to the two front facing legs with some screws. I drilled the holes in the legs a little oversize so the screws would easily move as the treadle goes up and down.
The Idea of gluing the crank to fill the threads didn't work so I pounded up a strip of sheet metal and bent it over the crank. Then I drilled a hole though the ends to tie a piece of twine. This kept the twine

from digging into the threads and tangling up.

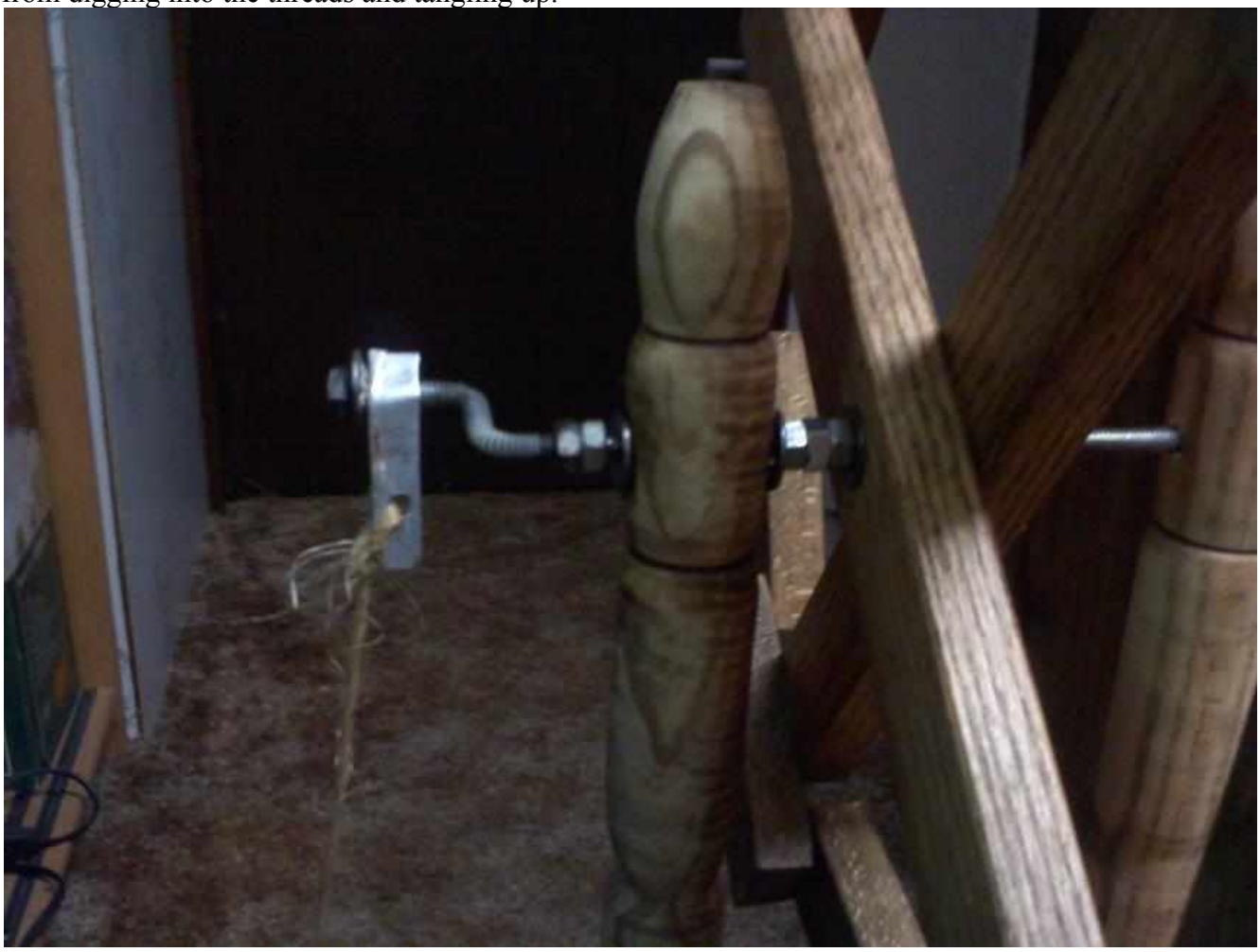

On the treadle frame, I just put a nail that the other end of the twine footman hooked over. Maybe not the best solutions but it was quick and seems to work fine. Since I had the base with the drive wheel and it turned with the treadle, I was anxious to see it actually spin some yarn. I already had the trial Mother-of-All with a couple maidens so it didn't take much to make up a spindle and pulley like the Dodec wheel used. I made the pulley from 3" squares of pine because I already had enough left over from making the Mother-of-All. It isn't a flyer type spinning wheel like I hoped to build but it worked at least as good as the Dodec spinning wheel and looked a little closer to what I wanted. It did take longer and used more wood. It would also be a lot harder to build if you didn't have many tools.

In the picture above, you can just barely see that I used a couple pieces of PVC pipe as spacers for the spindle pulley. I could have used a shorter Mother-of-All and placed the maidens a lot closer together and then used a few washers or a couple oversize nuts as the spacers but I already had the maidens screwed down with holes drilled for the spindle axle. These holes are much larger than they would have needed but they still work just fine. I just screwed the Mother-of-All to the base "temporarily" after lining it up using a couple clamps. That means the only adjustment for belt tension is where you tie the knot. That's how the Dodec spinning wheel works so it must be a workable option. Besides, this was just a test build anyway to make sure what I was trying to design and build would actually work. I didn't want to waste the nicer hardwood (probably mostly cherry with a little oak, butternut, or black walnut) on a test.

This next picture is my first wool yarn spun on this wheel. I'm still not real good at it but this is MUCH better than my first attempts at spinning yarn. The black yarn just barely visible in places was my leader yarn. You can also see how much oversize the hole in the maiden is. At least it won't seize up on me very easily. Remember, this was just a prototype. I'm documenting the process of basically designing a spinning wheel. This isn't the final design yet.

I still want to make a flyer type spinning wheel and might keep modifying this one to test out ideas. There is still a little finish work to do to this one like a little more stain on the spindle pulley and treadle. I still need to decide how to finish the treadle without using plywood. The one I'm copying was about 9 inches by 19 inches at the longest and widest point. I'll come up with some way of making the treadle have a little more surface area for your foot. I used it as it is but it could be better.

At least now I know that what I am attempting has a good chance of working. I have never used a flyer type spinning wheel so I can't really tell how much easier, quicker, or better it might be than a spindle type wheel. I do know that I can spin the yarn on a spindle wheel much faster than I can clean and prepare it so I don't really NEED a faster method of spinning.

I drew up the flyer assembly for my spinning wheel using a CAD program. It isn't exactly like my Grandfather's wheel but it is as close as I could draw it. The only way I could print it out full size without going directly from the CAD program was to print to a PS file. Unfortunately, I can't post that

picture directly so I changed it to a normal JPG file to display it on this site. You can download the original PS file if you want to print out your own full size copy of this flyer assembly drawing. It is set for the U.S. standard letter size of 8-1/2 x 11 inches if that matters.

flyer assembly to print.ps
Size : 112.33 Kb
Type : ps

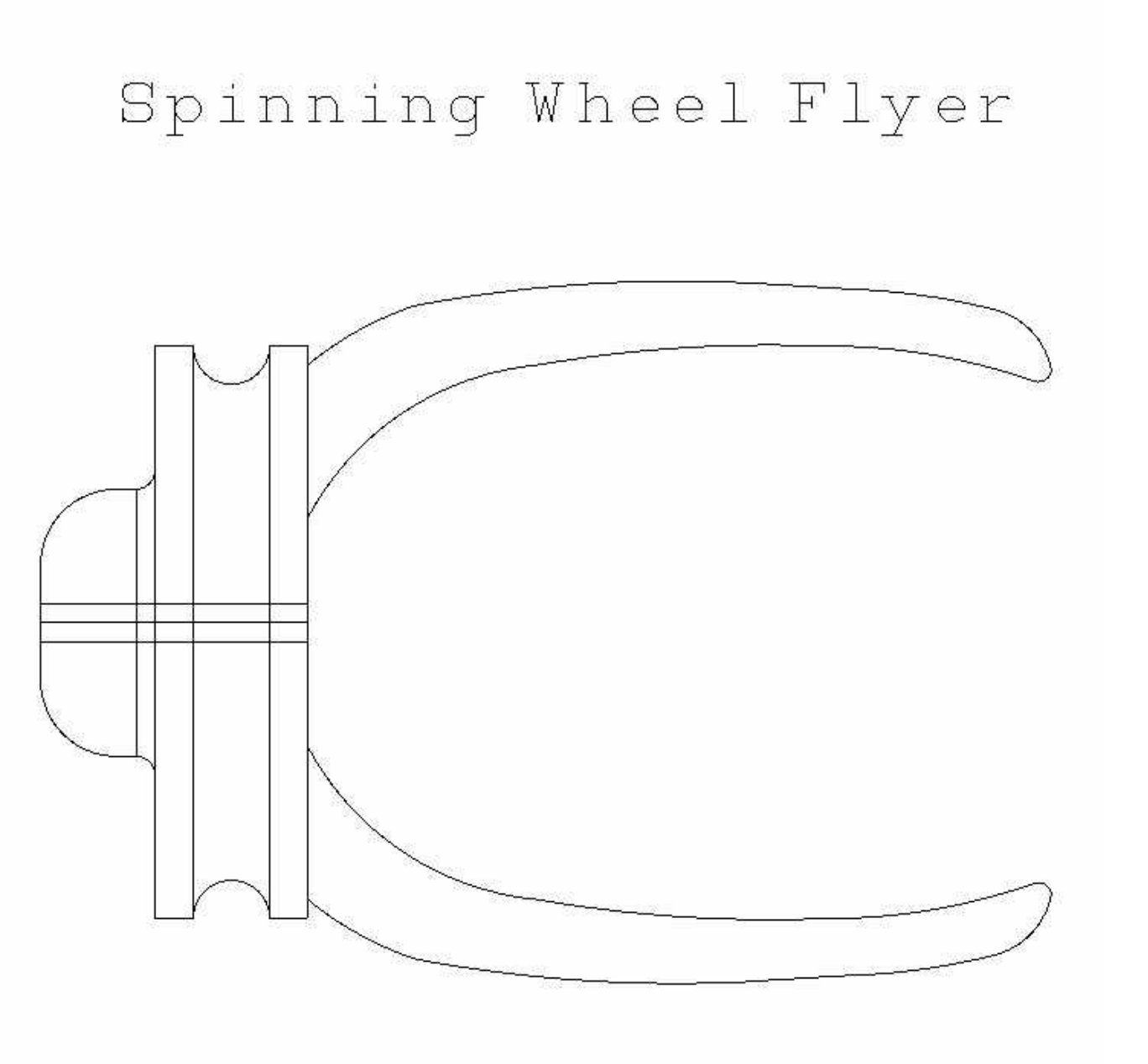

Measuring the arms a little closer, they were about 4-7/8 inches long and 5/8 inches thick but they were not a consistent width as I originally posted. The pulley is 3-3/4" diameter and 1" long and the hub on the end of the pulley is 1-3/4" diameter and 3/4" long. I drew up the hole as 1/4" diameter but the actual size will depend on what size the outside diameter of whatever pipe I find to use.
Edit: I have been informed that, on at least one commercial spinning wheel, the orifice diameter is

about 1 cm. which is just over 3/8" so even my estimated 1/4" diameter might be a bit small. I still will have to go with whatever pipe I can find.
The groove in the pulley is drawn at 1/4" deep and 1/2" wide at the top but that shouldn't be all that critical. It should be centered on the pulley and sized big enough and deep enough to allow the drive belt (string) to stay in place.

I made another CAD drawing showing the diameters and the location of the arms. No dimensions are shown but I might print it out full size to use to rough out and mark the center of the pulley.

flyer diameters and locations to print.ps
Size : 200.257 Kb
Type : ps

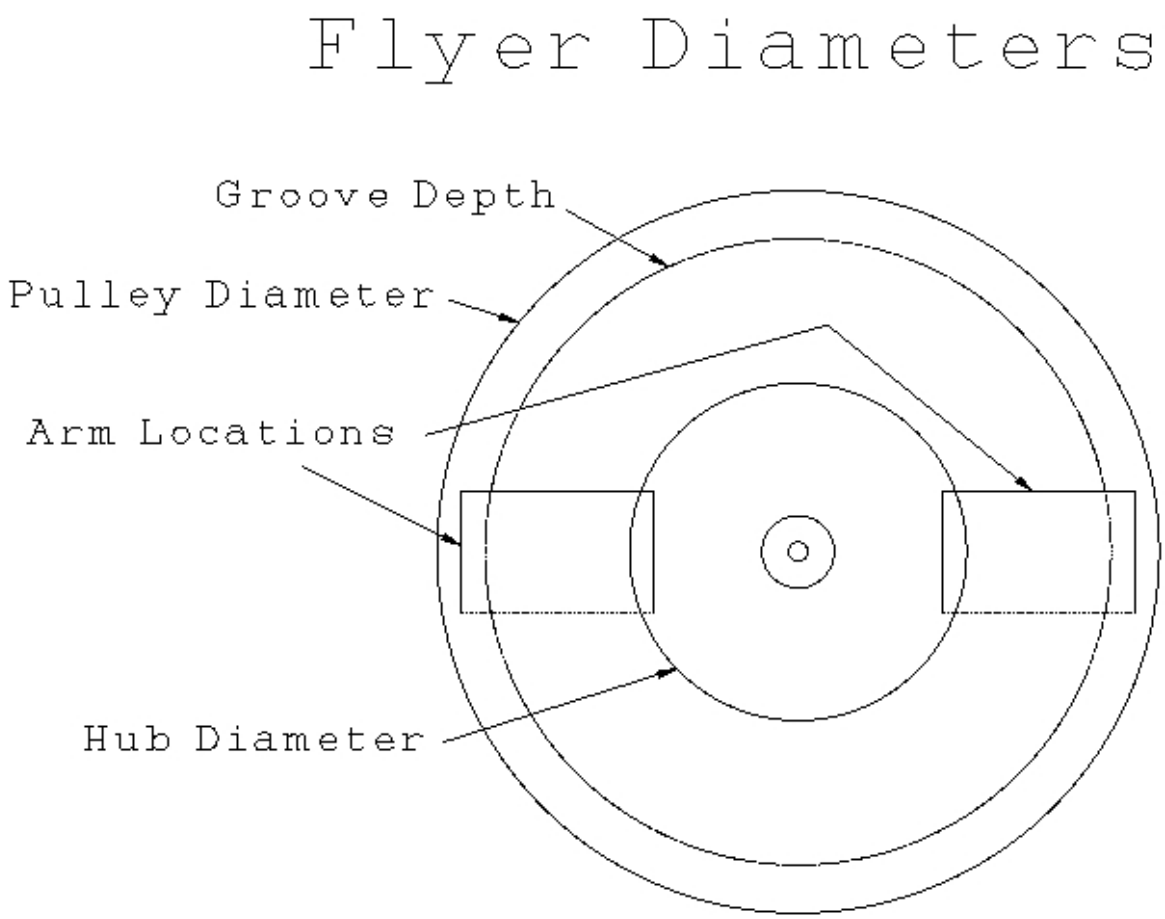

After attempting to drill the center holes in my Dodec style wheels and now a practice pulley, I have to admit that using a hand drill is just not going to work. It is hard to keep the hole straight enough especially when drilling through thicker material. Since the bobbin will require an even deeper hole, I'm going to have to use a drill press or possibly even a lathe with a chuck to hold the part and a drill chuck to hold the drill in line better. Oh well, if it was too easy, everyone would do it.

As another test to help convince myself that this flyer idea would work AND after cutting out one flyer arm and then chipping a corner off of it while sanding, I made a very crude flyer. I drilled it out and fit a short piece of PVC pipe as an axle. One end of the pipe was heated and expanded to keep the flyer from falling off.

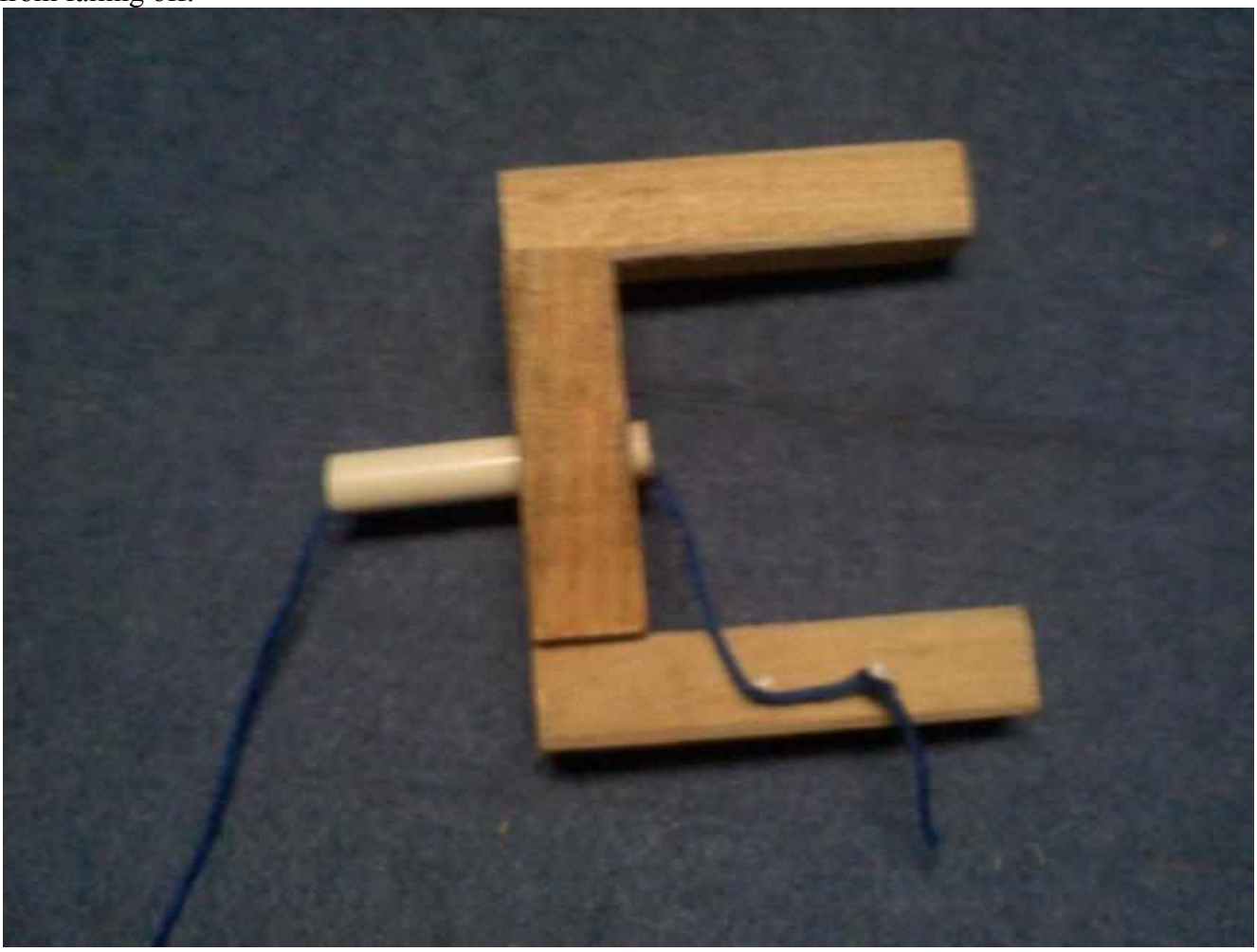

The above, fuzzy picture shows that flyer threaded with some commercial yarn. I fished the yarn through the pipe and around a couple nails. The end was just tied onto the second nail. Since I didn't have a bobbin for this test, I figured this would simulate a bobbin with NO brake at all. In other words, the bobbin would be spinning at the same speed as the flyer and the yarn would NOT be drawn onto the bobbin. Should be the same as if you held the yarn tight or was just using a spindle instead of a flyer. Then, I held onto the pipe that was sticking out the end to keep it from turning and also kept a hold on the yarn a little distance from the pipe to keep the twist from going too far. Next, I spun the flyer around and around and watched what it did to the yarn.

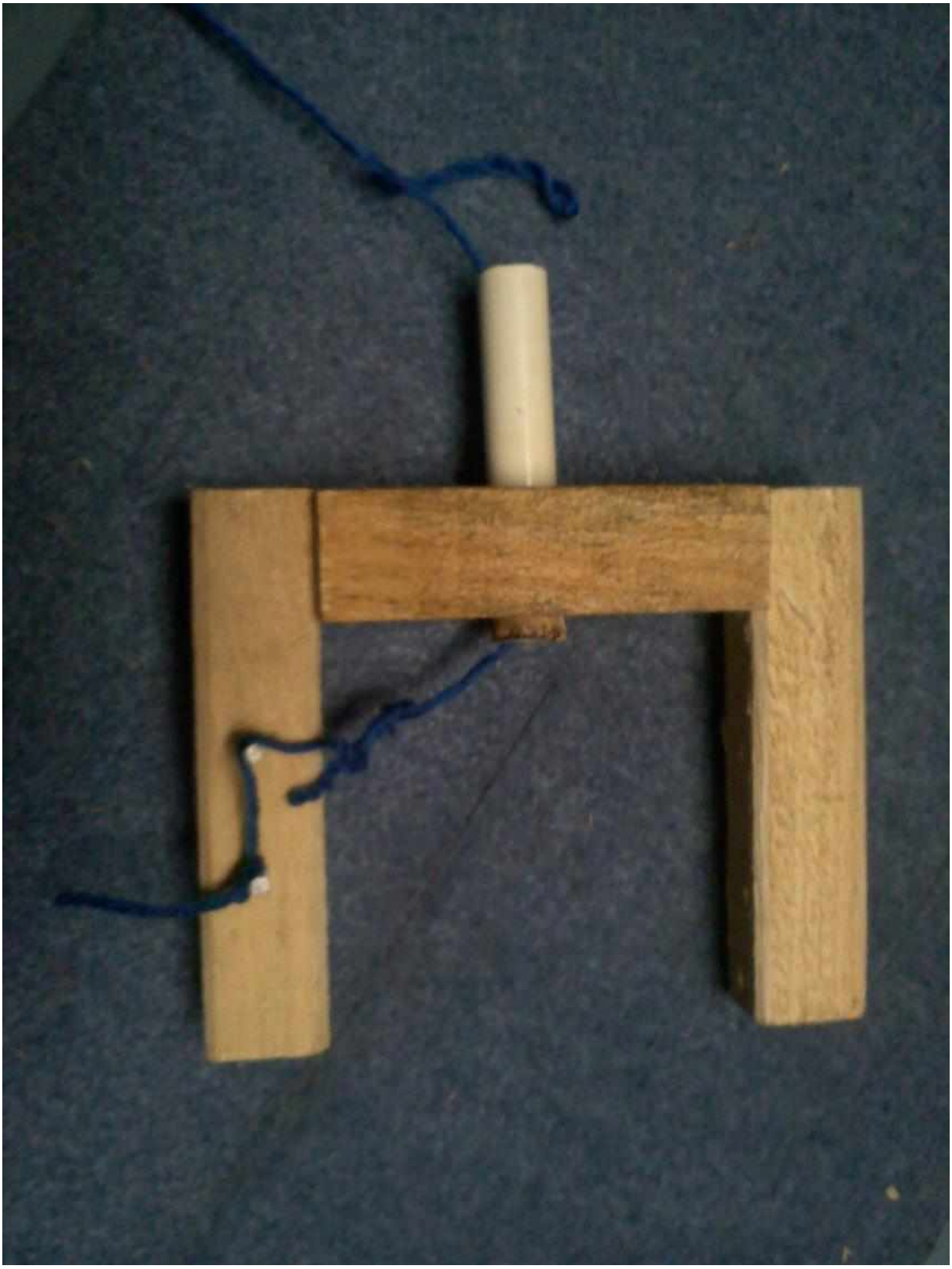

As you can see, it did add twist to the yarn. That simple test proved to me that just a straight, stationary pipe like on my Grandfather's spinning wheel would still twist the fibers. If there had been a bobbin that had a brake to make it turn slower than the flyer when you allowed the yarn to wind on, I'm pretty

sure it would have worked.
Now, all I need to do is figure out how I'm going to attach the nicer shaped flyer to the base and turn it with the drive wheel. Then all that will be needed is the bobbin and brake which doesn't sound that hard...hopefully.

The picture above is the latest version of flyer. Not exactly what I want but quick and easy for yet another test. This one was drilled on a drill press which made the holes line up much better. It used PVC pipe for both the arms and for the axle. Holding this by hand and driving it with one of the Dodec spinning wheels, it spins very fast. Maybe too fast since the flyer pulley is so small. I won't know for sure until I try spinning for real on it.

Next step is to attach this to the base of the wheel I'm building in place of the spindle and get it to work. Last time it was used, the nuts that hold the wheel tight to the shaft loosened up so they will need tightened up again.

IT WORKS ! ! !

I finally got the prototype spinning wheel done enough to test it out. It took a lot of trial and error to get everything lined up with the tension tight enough to spin the flyer but loose enough to allow the drive wheel to keep turning under foot power. The flyer and bobbin are made out of more PVC pipe

than I hope to use in my finished design but I had the pipe and it was much easier and quicker to build than cutting, and sanding wood to make the flyer arms and bobbin. It gave me a homemade spinning wheel that can be used and, more important, it proved that what I wanted to build would actually work.

There are a lot of parts not stained or even sanded but here it is.

The yarn you can see hanging out the front has been in and out of the orifice and on and off the bobbin many times playing with this spinning wheel. The Dodec style flyer pulley works but it slips easy if the drive string is not quite tight enough. If you look close and know what to look for, you could see that I drove a nail under the front of the Mother-of-All to give that drive belt just a little more tension. Obviously, the finished design will have to include a tension adjustment of some kind.

In the picture above, you can see that I used just enough hooks to test it out. You can also see the bobbin brake. The pulley was too rough to use yarn for the brake. It take very little pressure to slow the bobbin enough to work the way I want it to. Basically all I have is the string rubbing that pulley and it is enough to allow the yarn to wind on the bobbin but not so much that I can't pull the yarn back off if I want.

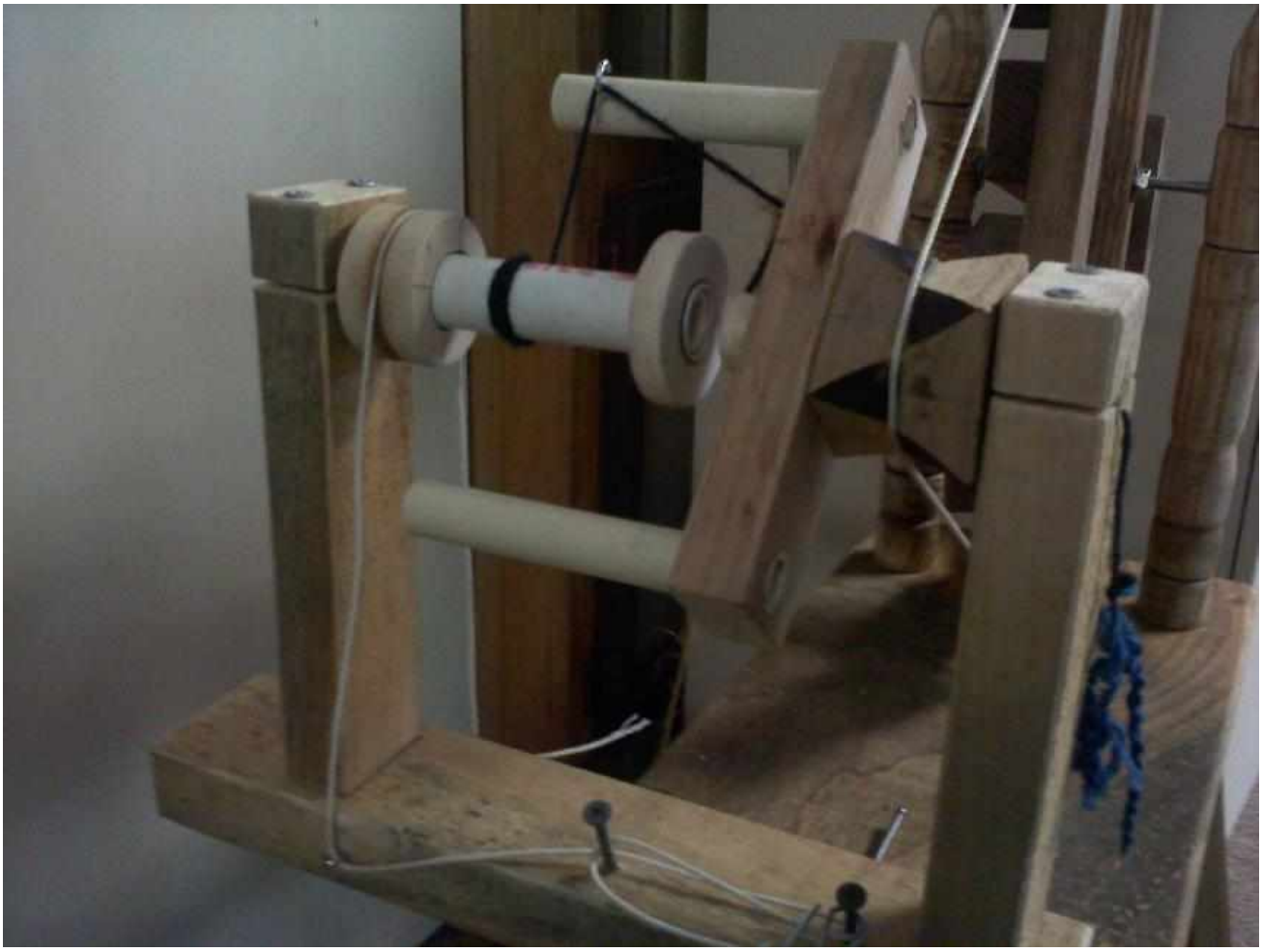

This was another view of the flyer assembly. A bit crude but it works. You can better see that nail used to tension the drive string and the brake string wrapped around the screws that are holding the whole assembly to the base.

I intend to use this wheel as it is until I get my design worked out for a nicer one. Feel free to use or copy any of these ideas for making your own spinning wheel. Eventually, I hope to have a better design worked out but the basic idea is here.

I cleaned and carded a little bit more wool and tried out the new spinning wheel a little more. That went real quick and seemed to do pretty good. I do need to build a better brake adjustment. Maybe all the spinning and rubbing smoothed up the bobbin pulley but it is very easy to get too much twist in the yarn.

After I run out of wool that was ready to spin, I looked around for something else to try. I wonder if fiber floss for an aquarium filter would work? A quick search on Google found only one person who admitted to trying it and they were not impressed. Of course, they had better fibers to spin so they didn't do more than a tiny bit before switching back to the real wool. The only way to know for sure was to try it. After all, I'm still testing this wheel and my spinning ability so I didn't want to waste my wool.

I got out my dog brushes and carded some up. I got some lumps in my yarn but some of that could be blamed the brake not working quite right and some was my poor drafting skills. The flyer pulley is pretty small compared to the one my Grandfather built so it was probably spinning faster than it should have been although it is about the same as what the Dodec used. Of course, his drive wheel was bigger so it might work out to be the same speed. I ended up with a bit more twist than it should have had and it sometimes got caught in the hooks when the yarn kinked up on the way to the bobbin.

The yarn at the top (below the dog brush) looks like some of my first attempts at spinning on the Dodec wheel did. The shorter piece in the center was a much more consistent size. Both of them were two ply made by just folding the yarn over itself and letting it twist together.

The new spinning wheel as well as my own skills still needs a little work but I knew it wouldn't be quite right on the first try. Not too bad considering I've never examined a spinning wheel before except for my homemade ones. At least it is working ... somewhat. The fiber floss wasn't too bad to work with and I'm sure, with a little more practice, I could get it to spin better. The aquarium type is kind of expensive but the polyester stuffing used for crafts is around half the price of the raw wool I got so it might be good for a beginner to practice with. It is also easier to get locally and doesn't need washed.

After getting a couple messages from "ilovesocks" on the spinning forum, I checked the ratio of my spinning wheel. Some quick calculations showed it to have a 10 to 1 ratio but actually turning the wheel by hand and counting revolutions, it turns out it is really 7 turns of the flyer for every 1 turn of the drive wheel. That is on the high side for beginners but should still work. I think the main problem with this wheel and it putting too much twist in the yarn is the fact that it has to be pedaled fast to keep it spinning.
I waxed the drive axle and the flyer axle to reduce the friction and it allowed it to spin a little slower without stopping but when it is actually spinning yarn, that added friction requires it to be turned faster to keep enough momentum to continue turning.

I made a new flyer assembly with a larger pulley (whorl) and swapped it with the other one. My drive string was not long enough anymore and I didn't have enough of the string I used to make another one so I made one out of a doubled strand of yarn. This new flyer has about a 4 to 1 ratio which is slower than most wheels would have but since I have to pedal this one fairly fast to keep things moving, it might work out good.

In the picture above, you will see that I tried this out using some commercial yarn. The same yarn used for the new drive belt. I was spinning it opposite to what it originally had so it first removed the original twist and then added new twist.

Folding the newly spun, commercial yarn back on itself, the resulting twist was much closer to what I was looking for.
The next picture shows a closer view of my latest setup. You can see the single yarn that was twisted with this new flyer still partially on the bobbin. Below that, you can see the wool single yarn I spun with the old setup. I didn't want to remove it yet since I plan to add to it once I get the spinning wheel working the way I want it to. There isn't a lot of wool yarn on the bobbin but more than I wanted to remove yet.

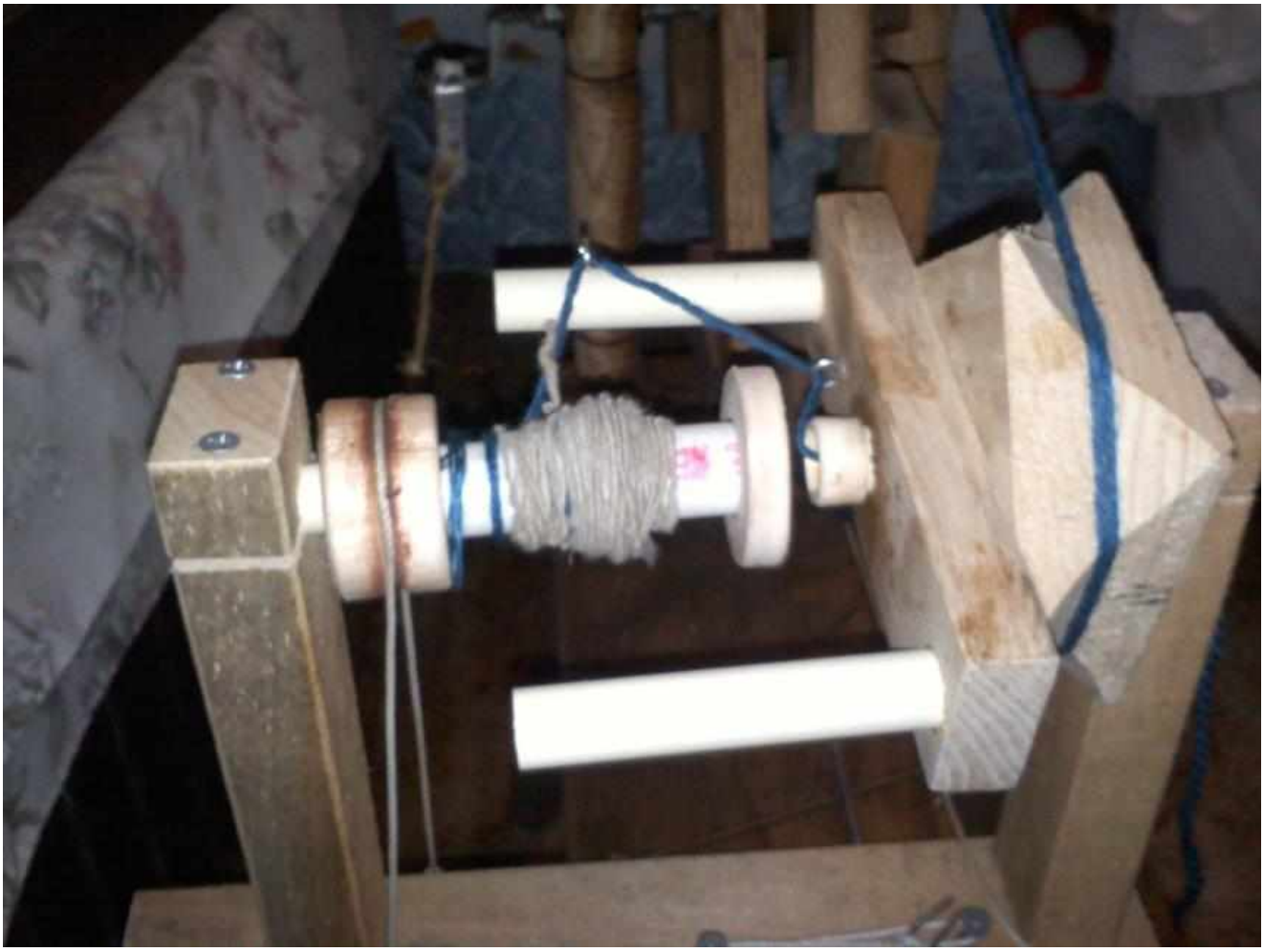

Looking at the picture above, I see one place where I am getting my friction from. The freshly spun yarn bends and rubs on the stationary PVC pipe that is used as the flyer axle before it goes to the first hook. I'll have to examine it to see how I can fix that. If it doesn't hit the bobbin, I might be able to eliminate the first hook and move it up to the flyer arm. If that won't work, I'll try cutting a little more off the end of the pipe. Maybe both ideas. By the way, that pipe has what used to be an end cap that has been cut off so the hole goes through the pipe but still keeps the flyer from coming off.
The next problem, which didn't show up until I tried to actually spin some more of the filter floss, is the bobbin brake. I need to find a small spring and make it easier to adjust. Not enough tension on the bobbin and the yarn won't wind on. Just a little too much and it either winds the yarn on too fast or stops the bobbin and flyer from spinning at all.

One step at a time but it is getting closer to working the way I want it to.

Above you can see how I modified the flyer to give the yarn an easier path to the bobbin. I cut off most of the end on the PVC pipe and found a little bit longer hook. I also put another hook on the flyer arm to make sure the yarn didn't hit the bobbin. This reduced the friction quite a bit and allowed me to

pedal a little slower.

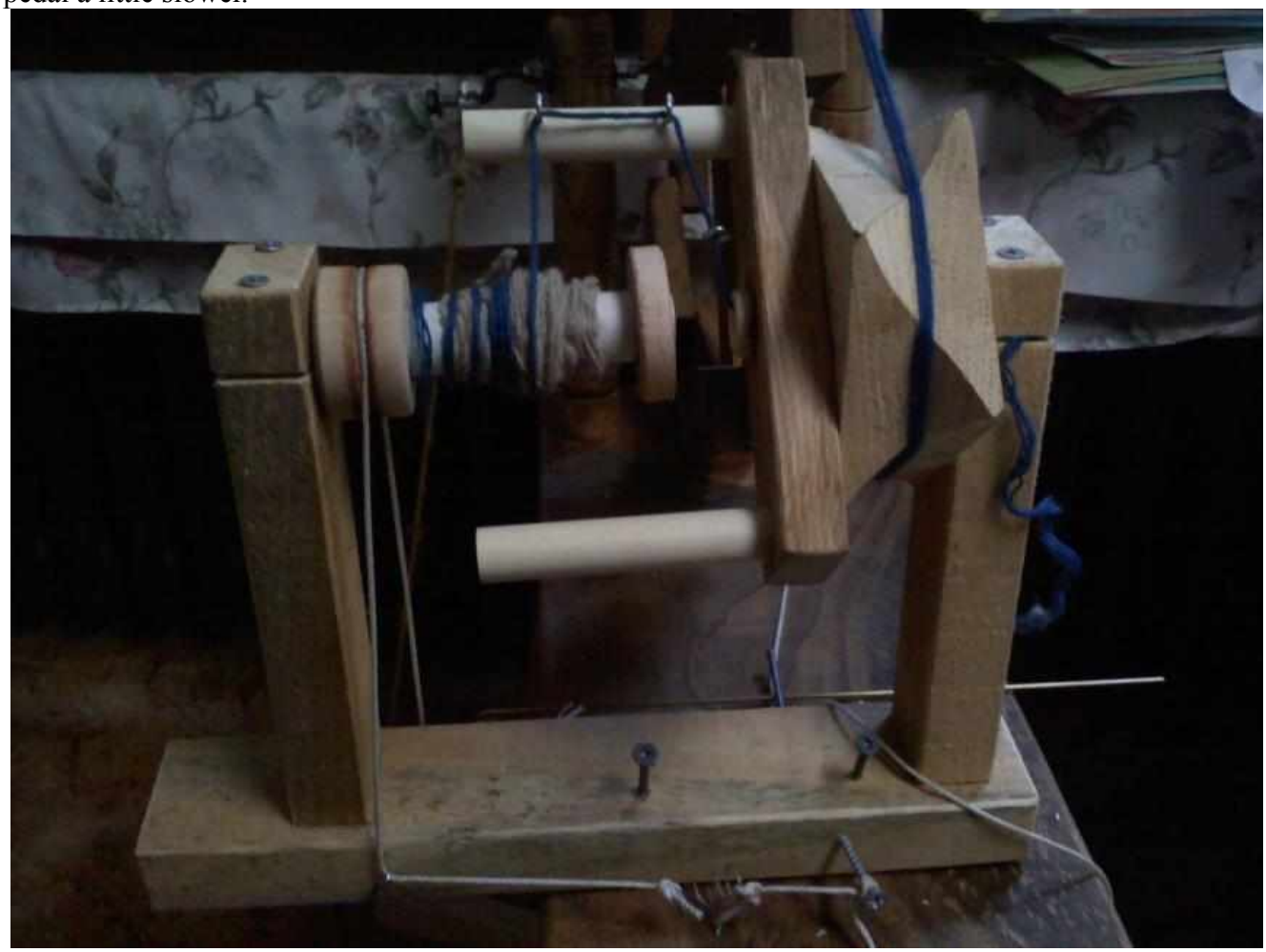

I also found a spring for the bobbin brake. It isn't exactly what I was looking for but it will work for the prototype. This gave me a less sensitive adjustment for the brake and seems to work much better than the string alone. I carded a little bit more wool and tried spinning it without pre-drafting. That worked but I wasn't real happy with the results. I got some lumps in that yarn but that was due to my drafting skills and not this spinning wheel.

I plan to get some wool ready to spin and give it a better test but I think I've just about got the mechanics of my design proved out. The rest is just things to fancy it up like a way to adjust and tension the drive belt without tying a new knot and a better bobbin brake adjustment knob. Also, on this version, I have to either remove the two screws holding the bobbin shaft to the maiden or twist the maiden to remove the bobbin. There is a better solution to that but I'm not sure exactly what it is yet. I'm probably going to go with a little higher ratio on the next version but I'll have to use this one for a while to be sure. The Dodec style pulley and the drive wheel itself are other things I might change. Maybe not though. It is a different look but I'm not sure it is a bad look. It sure is a lot easier to build than round ones.

After watching and re-watching many videos on how to spin, I've decided that it is just NOT POSSIBLE for a beginner to spin yarn that looks like store bought yarn. Most of the videos looked like they were not making perfectly smooth and consistent yarn either and they had been spinning a lot longer than me. With that in mind, I spun almost all of the little lump of filter floss on my newly built spinning wheel and didn't worry about making it perfect. Then, I took that yarn and wrapped it onto a homemade nostepinne and made a ball of my own yarn. Next, not knowing if it would even work, I turned it into double ply yarn using the center strand and the outside one of that little ball of yarn. Then I used a couple 3/8" dowel rods as knitting needles and knit the resulting yarn.

You can see that my knitting is about as good as my spinning but it seemed to work even though the yarn was lumpy and thick-and-thin. Definitely homemade but would probably work for a hat or afghan. Yes, I had to look up how to spell that. I don't want a white hat and it doesn't look like polyester fiber fill can be dyed a different color. Oh well, except for the couple short pieces shown in the picture, I don't have any more of that fiber anyhow. It is possible to spin it though and someone with more experience could probably do better but then they probably don't want to make polyester yarn and don't need something cheap to practice with.

After testing this spinning wheel out a little more, I found a couple more things that need changed on my next build. The flyer arms should be a little bit longer to reach the end of the bobbin and the bobbin itself could use some larger diameter ends.
Most of what I spun was pre-drafted, which really made a difference in both the speed and the looks of the yarn. The last of the yarn was tried without pre-drafting and just carding the wool and drafting it out as it was spun. That made the yarn have some more lumps and thin spots but saved the effort of pre-drafting and is how I hope to be able to spin. I should get better the more I do it and probably won't improve if I don't practice doing it.
I am tempted to try using this yarn on the hat loom as it is without plying it. My first self-spun hat WAS made without plying the yarn and held up to hand washing so far but that yarn was some of the first I made on the Dodec spindle type spinning wheel and was pretty thick. Doubling it would have made rope. I have to get this yarn off the bobbin since I only made one bobbin so far. That will give me a chance to see the yarn and decide if it will be used as it is or wait until I have another bobbin full to ply it. I'm sure there isn't enough to finish a hat anyway.

I could just wrap the new yarn onto a dowel rod or something else but decided to research niddy noddys to see how they work and how I could build one.

Here's one video I found that shows how to wind the yarn onto the niddy noddy, how to tie it off, and how to calculate the length. She says divide the number of strands by two and should have said multiply since she has a 2 yard niddy noddy but the video showed what I wanted to know.

How to use a niddy noddy and twist a skein of yarn
http://www.youtube.com/watch?v=QdS4lZMcqGI

Next, I wanted to find out how to make one. Specifically, how to make one that made a 1 yard hank of yarn. On this website, I found instructions to build one out of PVC pipe. I'll probably use wood but that site did give a chart that gives the length of the body section needed for different lengths of hanks. For a 1 yard hank, it calls for a 5-1/2" length. I didn't know the total length without finding some PVC fittings and, depending on where you wind the yarn, the length will change a little bit. I chose some pieces of pine out of the firewood pile and cut a 1" square piece to 7 inches long and two 1x1/2 pieces also at 7" long. That made the total length 8 inches. Add in 2 inches to account for the width of the end piece and that SHOULD give me a total skein length of 36" or 1 yard for each full wrap.

I wrapped the yarn on a little too tight and this yarn was not plied so it curled when I removed it from the niddy noddy. I'm glad I tied it off first. I counted 26 strands but since I stretched it a bit while wrapping, I'm going to call it 25 yards or around 75 feet of yarn. If it had been plied, less than that

would fit so I do need to make the bobbin ends higher so it will hold more. The brake pulley should probably be made smaller or at least kept the same as this one to keep from adding too much friction. Version 2 might not be the final design either but I'll find that out after I build and test it.

Twisting this yarn into a skein makes it look a little better and should keep it from tangling up before I need it again to either use it as it is or ply it with another batch.
I'll have to make a tag for it so I know what it is and the approximate length as well as the date it was made. Now I've got an empty bobbin to spin some more. You probably noticed that I didn't even sand this niddy noddy. I didn't know if it would even work so I just threw it together out of rough cut lumber and a couple nails. I'll eventually make a nicer one but this will do for now.

I washed this skein of yarn and now have it hanging up to dry to try to set the twist in it. It looks like it will work but I'll have to wait until it dries to see if it made a difference.

Then, with an empty bobbin just waiting to be filled up, I added some more hooks to my flyer to try to wrap the yarn more even and tried it again. This time, I didn't pre-draft the wool at all and just carded it (with dog brushes) and spun it directly. I quit worrying about the lumps and just made yarn. That try only got me 22 yards before the bobbin wouldn't pull the yarn in anymore. I made some adjustments and tightened up the drive string. Yarn probably isn't the best thing to use as a drive belt even if it is doubled. I think it just stretched out.

Next, I decided to do a test. I carded up about a half ounce of wool in preparation for my third try with this spinning wheel.

If you look close, you can see little white balls in this wool. This was raw wool and there are some very short pieces mixed in with the wool. I cleaned out some of them but left a lot in the carded wool. That could be part of my lumpy yarn problem but I quit worrying about it.

In the picture above, you can see the extra hooks I added to the flyer arm and the half ounce worth of wool on the bobbin. It could have held more but I run out of wool to spin.
Next, I took the freshly spun yarn off of the bobbin and wrapped it onto my homemade niddy noddy.

I counted 24 wraps which should mean there is 24 yards of single strand yarn that I spun from a half ounce of wool. It only took about a half hour to spin this batch of wool and probably that long to card it and get most of the vegetable matter out of it. It had previously been washed and dried.

I tied the yarn in four places and pulled it off the niddy noddy. Like the other two skeins I have made so far, it curled up as soon as it was removed. I took it to the sink and washed it with hot water and then cold water to "shock" the yarn and hopefully set the twist. Again, I won't know if it worked or not until the yarn dries. I have the three skeins hanging up lightly weighted to dry.
Here is the last one still wet before I hung it up to dry with the rest.

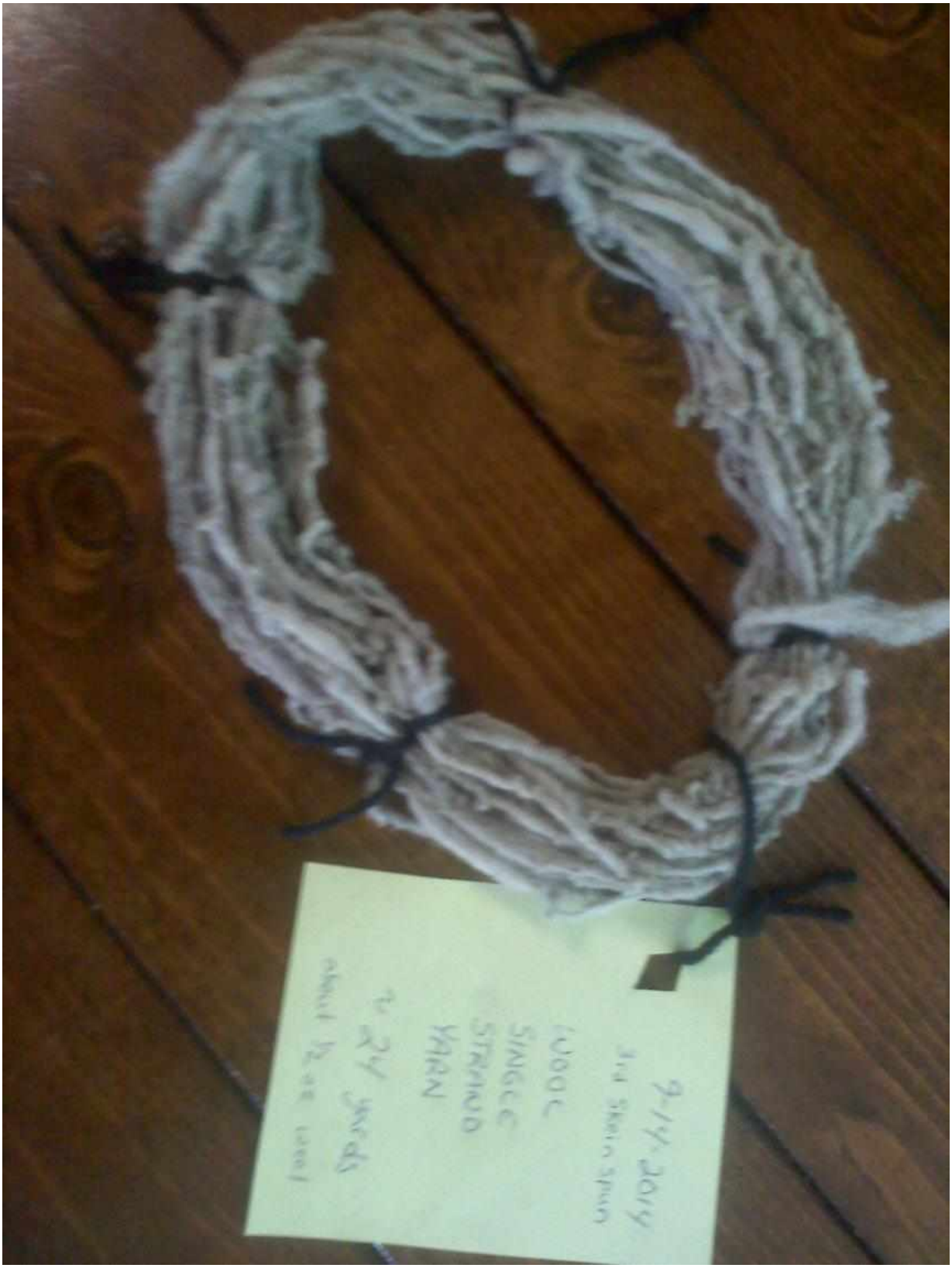

I might save the first skein of yarn I made just as a sample of my first yarn just in case I get better at spinning. The second and third ones I might use as they are or I might ply them together. I haven't decided yet.

Once the first three skeins of singles dried, I wanted to try plying some yarn. I did save the first one as a sample.

I carefully wound the second and third skeins onto a homemade nostepinne to make them into balls. This was not as easy as it would have been if I had a yarn swift but it worked without tangling on these fairly short skeins.

With two balls of singles, I was ready to ply them together.

These two balls of yarn made about 21 yards of double ply yarn and a little bit left from the larger ball. The next picture shows that yarn on the spinning wheel's bobbin. You can see that it filled it a lot more than the singles did but still worked. It did go much faster than spinning from fibers too.

Wrapping that yarn onto the niddy noddy to make a skein, I noticed that it was less than The shortest length I started with but it should hold up better than singles alone. There are still lumps and thin spots but I'm sure it will still work.

In the picture above, you can see the single yarn below the skein. Doubling it made the yarn look a lot better even if it is still not as smooth as commercial yarn.

I'd say this pretty much proves that the basic design of this spinning wheel does work. I'll probably continue playing with this wheel before I start version two. That will give me time to decide what changes need to be made.